INSPIRE 1 PRO

Quick Start Guide

V1.0

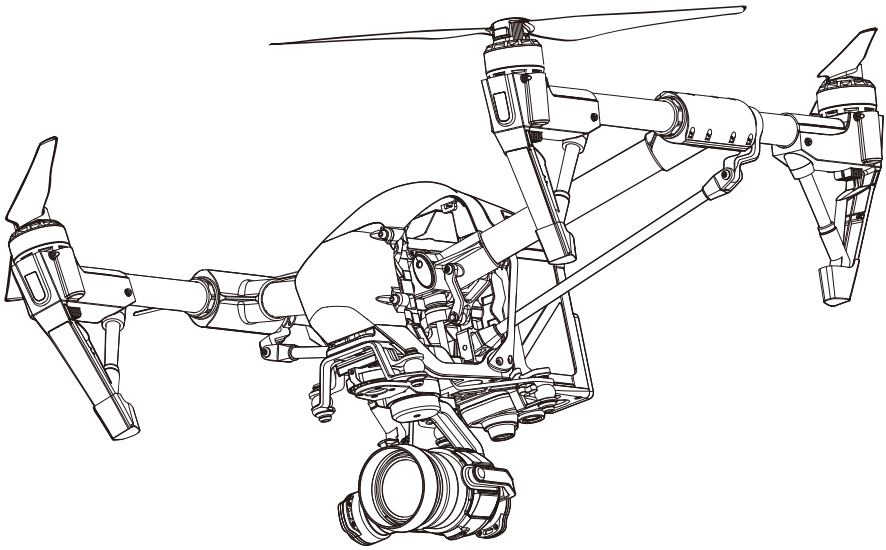

INSPIRE 1 PRO

The Inspire 1 Pro is a professional aerial filmmaking and photography platform that is ready to fly right out of the box. Featuring an onboard camera equipped with a 15mm f/1.7 (35 mm format equivalent 30 mm) lens and 3-axis stabilized gimbal, it shoots sharp 16mp stills and stable video at up to 4K. Its retractable landing gear pulls up out of view, giving the camera an unobstructed 360 degree view of the world below.

An advanced flight controller makes the Inspire 1 Pro stable, safe and easy to fly indoors or out. The brand new Vision Positioning System (VPS) gives it the power to hover in position at low altitudes even without GPS. Like all DJI flight controllers, it is also able to return home if remote controller signal is lost or if the low battery warning is triggered.

The Inspire 1 Pro boasts a maximum flight speed 18m/s* and a maximum flight time of 15 minutes* using one fully charged 4500mAh Intelligent Flight Battery.

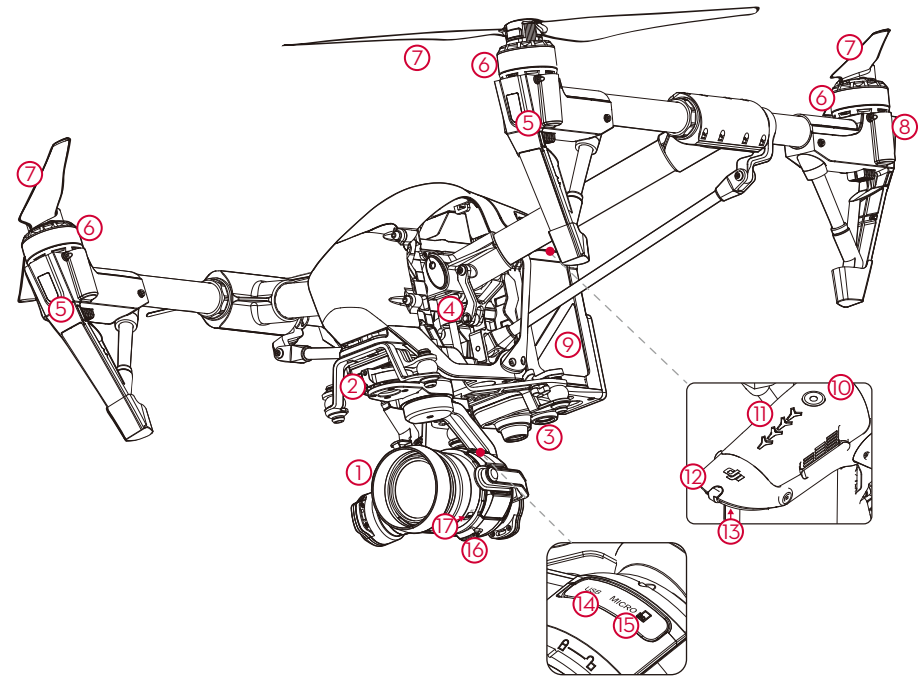

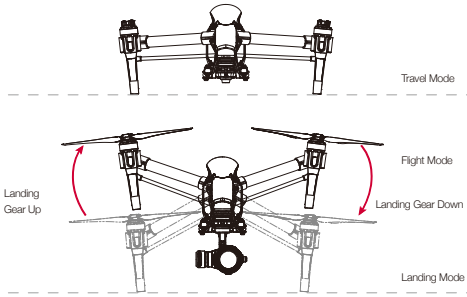

1. Gimbal and Camera
2. Gimbal Lock
3. Vision Positioning System
4. Transformation Mechanism
5. Front LEDs
6. Motors
7. Propellers
8. Rear LEDs
9. Intelligent Flight Battery
10. Power Button
11. Battery Level Indicators
12. Aircraft Status Indicator
13. Aircraft Micro-USB Port
14. Camera Micro-USB Port
15. Camera Micro-SD Slot
16. Lens Release Button
17. AF/MF Switch

* The maximum flight speed and maximum run time (hovering state) were tested in a lab environment, at zero-level elevation and in windless conditions, and should be taken as reference only.

Remote Controller

The maximum transmission distance of the Inspire 1 Pro remote controller is 2km*. The remote controller also allows you to control the landing gear or activate Return to Home with a tap. Other buttons allow instant photo capture, video recording, picture review and gimbal control.

A DJI Lightbridge-based HD video downlink is built-in, letting you see what your camera sees on your mobile device in real time HD. The app also allows you to change camera settings and activate Master/Slave mode so that one person can fly while other controls the gimbal independently. The master and slave controllers communicate using a 5.8Ghz wireless signal, and have a communication range with each other of up to 50 meters.The controller's LiPo battery has a maximum run time of approximately four hours and can be charged by plugging directly into the controller.

1. Power Button
2. Transformation Switch
3. Return to Home (RTH) Button
4. Control Sticks
5. Status LED
6. Battery Level LEDs
7. Power Port
8. Mobile Device Holder
9. Antennas
10. Handle Bar

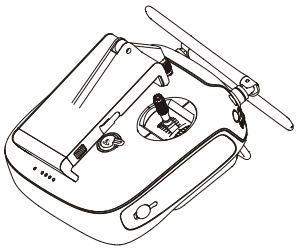

Folded

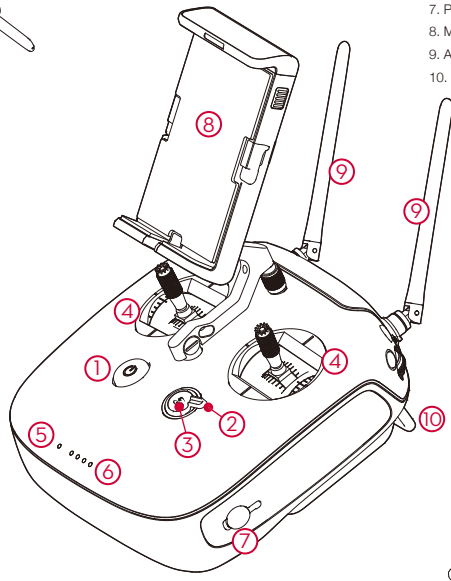

11. Gimbal Dial
12. Camera Settings Dial
13. Video Recording Button
14. Flight Mode Switch
15. Shutter Button
16. Playback Button
17. Mini-HDMI Port
18. Micro-USB Port
19. CAN-Bus Port
20. USB Port
21. Back Buttons (Reserved)

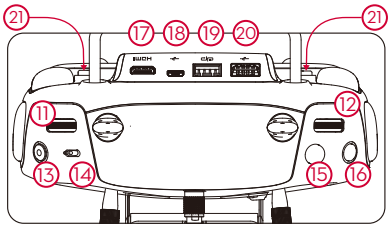

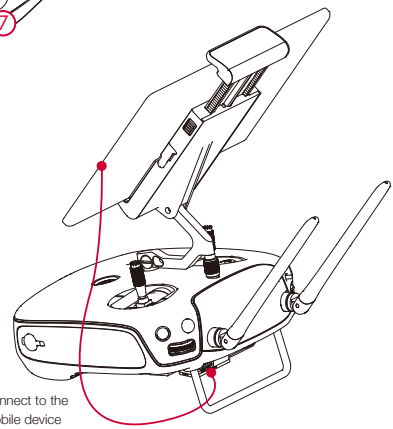

Connect to the mobile device

* Please note that the max transmission distance were tested in a lab environment. This statistic is for reference only, as conditions in your area may vary.

Fly Safe

DJI encourages you to enjoy flying in a safe, responsible and smart way.

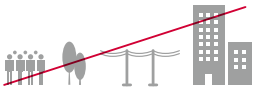

DO NOT FLY near or above people, near trees, power lines or buildings.

DO MONITOR YOUR ALTITUDE

and fly under 400 feet (120 meters).

It is important to understand basic flight guidelines, for the safety of both you and those around you. Refer to the Safety Guidelines and Disclaimer for more information.

DO NOT FLY in rain, snow, fog, and wind speeds exceeding 22 mph or 10 m/s.

DO MAINTAIN LINE OF SIGHT

and avoid flying behind buildings or obstacles that block your view.

No Fly Zones

More information at:
http://flysafe.dji.com/no-fly

- Be very careful when flying 14,700 feet (4,500 meters) or more above sea level as the battery and aircraft performance may be reduced.
- The Inspire 1 Pro's compass and GPS will not work in Polar Regions. The aircraft will auto switch to ATTI Mode and use the VPS for positioning.

Calibrating the Compass:

Make sure to calibrate the compass in every new flight location. The compass is very sensitive to electromagnetic interference, which can cause abnormal compass data leading to poor flight performance or even failure. Regular calibration is required for optimum performance.

- DO NOT calibrate your compass where there is a chance of strong magnetic interference, such as magnetite, parking structures, and steel reinforcements underground.
- DO NOT carry ferromagnetic materials with you during calibration such as keys or cellular phones.
- DO NOT calibrate beside massive metal objects.
- If it is blinking red and yellow alternately after placing the aircraft on the ground, the compass has detected magnetic interference. Change your location.

P Mode:

In this mode, the Inspire 1 Pro has a strong GPS signal and can use the VPS allowing it to hover accurately in position indoors and out. If outdoors, this mode also means that a Home Point has been locked so that it can Return to Home if the control signal is lost.

If you are not in this mode, toggle the Flight Mode Switch to P position to enable it.
The Flight Mode Switch is locked in P mode by default.
Refer to the User Manual on how to unlock the switch.

There are three states in P mode.
P-GPS: GPS works best when outdoors in a wide open area, and your Inspire 1 Pro uses GPS to hover in place when the GPS signal is strong. **P-OPTI:** If GPS is not available, the aircraft can use the VPS to hover accurately. **P-ATTI:** Neither GPS or VPS available, aircraft is using only its barometer for positioning, so only altitude is controlled. Note that the VPS may not work properly when the Inspire 1 Pro is flying over water, over surfaces without a clear pattern, or in a low light environment.

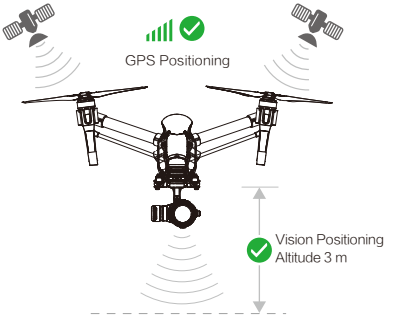

Return to Home:

When the GPS signal is strong, the aircraft will be able to record a Home Point and return to the Home Point when needed. The GPS location is recorded when the GPS signal icon in the DJI GO app is either yellow or green.
The aircraft will return to the Home Point automatically in the following cases (all require a strong GPS signal).
Smart RTH: When you press the RTH button on the remote controller or in the App. Low Battery RTH: The DJI GO app notifies users to take action when the battery level falls to a specified threshold.
Failsafe RTH: When the remote controller signal is lost.

- **The aircraft cannot avoid obstacles during the Failsafe RTH, but user can regain control of the aircraft when signal transmission is resumed; therefore it is important to set an appropriate Failsafe altitude before each flight. Be sure fly higher than any tall buildings to avoid crashing.**

Appendix

- Aircraft (Model: T600)

Weight	2870 g (Battery and Propellers Included, Zenmuse X5 Excluded)
Weight	3400 g (Battery, Propellers and Zenmuse X5 Included)
Maximum Weight of Payload	3400 g
Max Tilt Angle	35°
Max Ascent Speed	5 m/s
Max Descent Speed	4 m/s
Max Speed	18 m/s (ATTI mode, no wind)
Max Altitude Above Sea Level	14,700 feet (4,500 meters)
Max Flight Time	Approximately 15 minutes
Operating Temperature Range	14° to 104° F (-10° to 40° C)

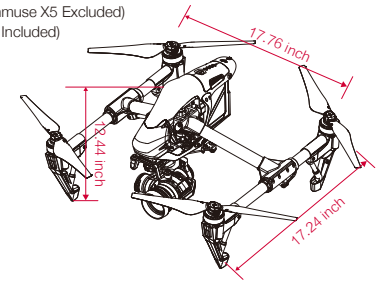

- Gimbal

Angular Vibration Range	±0.02°
Controllable Range	Pitch: -90° to +30° Pan: ±320°
Max Controllable Speed	Pitch: 120°/s Pan: 180°/s

- Vision Positioning System

Velocity Range	<8 m/s @Altitude 6.56 feet (2 m)
Altitude Range	0.16 feet - 16.4 feet (5 cm-500 cm)
Operating Range	<9.84 feet (<300 cm)
Operating Environment	Surface with clear pattern and adequate lighting (>15 Lux)

- Camera (Name/Model: ZENMUSE X5/FC550)

Sensor	Type 4/3 CMOS sensor Effective pixels: 16M
Lens	DJI MFT 15mm f/1.7 ASPH (FOV72° 35 mm format equivalent 30 mm)
ISO Range	100-25600
Electronic Shutter Speed	8 s-1/8000 s
Image Max Size	4608×3456
Still Photography Modes	Single shoot; Burst shooting: 3/5/7 frames Auto Exposure Bracketing (AEB): 3/5 bracketed frames at 0.7EV Bias; Time-lapse
Video Resolution	UHD: 4K (4096×2160) 24/25p, 4K (3840×2160) 24/25/30p, 2.7K (2704×1520) 24/25/30p FHD: 1920×1080 24/25/30/48/50/60p
Max Bitrate Of Video Storage	60 Mbps
Supported File Systems	FAT32 (≤ 32 GB), exFAT (> 32 GB)
Photo Formats	JPEG, DNG
VideoFormats	MP4/MOV (MPEG-4 AVC/H.264)
Supported SD Card Types	Micro SD, Max capacity: 64GB. Class 10 or UHS-1 rating required
Operating Temperature Range	32° to 104° F (0° to 40° C)

- Remote Controller (Name: C1)

Operating Frequency	922.7 MHz-927.7 MHz (Japan only) 5.725 GHz-5.825 GHz 2.400 GHz-2.483 GHz
Transmitting Distance	6,561 feet (2,000 meters) (outdoor and unobstructed)
Video Output Port	USB, Mini-HDMI
Operating Temperature Range	14° to 104° F (-10° to 40° C)
Battery	6000 mAh LiPo 2S

- Charger (Model: A14-100P1A)

Voltage	26.3 V
Rated Power	100 W

- Intelligent Flight Battery (Model: TB47, Standard)

Capacity	4500 mAh
Voltage	22.2 V
Battery Type	LiPo 6S High voltage battery
Energy	99.9 Wh
Net Weight	570 g
Operating Temge	14° to 104° F (-10° to 40° C)
Max Charging Power	180 W

- Intelligent Flight Battery (Model: TB48, Optional)

Capacity	5700 mAh
Voltage	22.8 V
Battery Type	LiPo 6S High voltage battery
Energy	129.6 Wh
Net Weight	670 g
Operating Temge	14° to 104° F (-10° to 40° C)
Max Charging Power	180 W

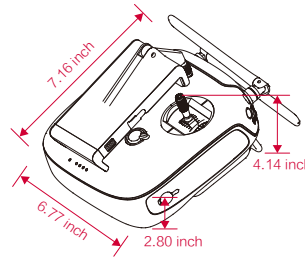

※ This Quick Start Guide is subject to change without prior notice.

CE 1313 RoHS

YC.BZ.S00249

Using INSPIRE 1 PRO

Watch the video tutorials on the official DJI website and read the following documents before using your Inspire 1 Pro for the first time: *Inspire 1 Pro Quick Start Guide, Inspire 1 Pro Intelligent Flight Battery Safety Guidelines, Inspire 1 Pro Safety Guidelines and Disclaimer, Inspire 1 Pro In the Box, Inspire 1 Pro User Manual.*

1. Download the DJI GO App

Search '**DJI GO**' on the App Store or Google Play and download the app to your mobile device.

2. Watch the Tutorial Videos

Watch the tutorial videos at www.dji.com or in the DJI GO app.

DJI GO app

The tutorial videos

- For the best user experience, please use mobile devices with iOS 8.0 (or higher) and Android 4.1.2 (or higher).

3. Check Battery Levels

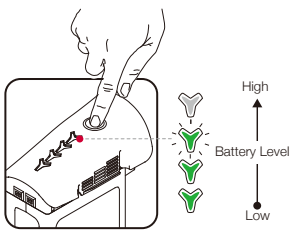

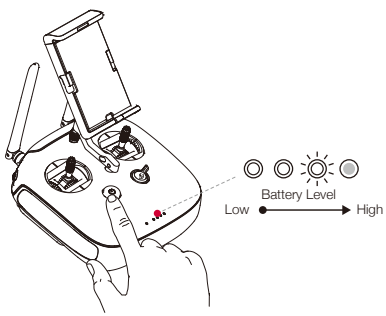

- Press once to check the battery level.
- Press twice and hold to turn on/off.

- Intelligent Flight Battery must be fully charged before using it for the first time.

4. Charging

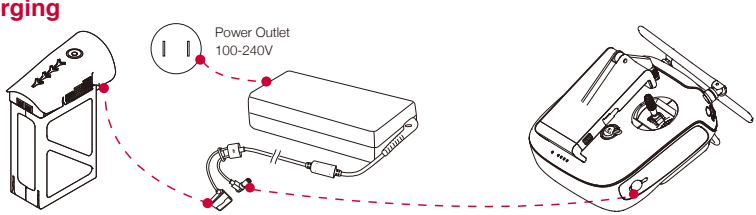

- Use only the supplied charger to charge the battery. Only charge the battery when it is powered off. DO NOT charge the Intelligent Flight Battery and remote controller at the same time.
- When charging is complete, the battery will automatically power off and the Status LED will change from red to green.

5. Preparing the Aircraft

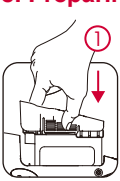

Insert the Battery

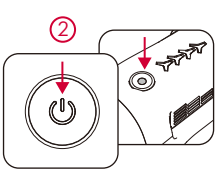

Power on the remote controller and the aircraft

Toggle up and down at least four times

Change aircraft to Landing Mode

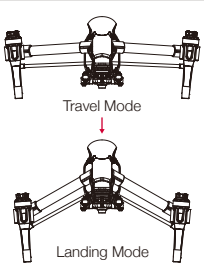

- If you have purchased the dual remote controller version, you must use the Master remote controller to deactivate Travel Mode.
- Toggling up and down at least four times to change aircraft back into Travel Mode.

6. Preparing the Remote Controller

Tilt the Mobile Device Holder to the desired position then adjust the antennas as shown. The strength of the remote controller signal is different when the antenna position is different.

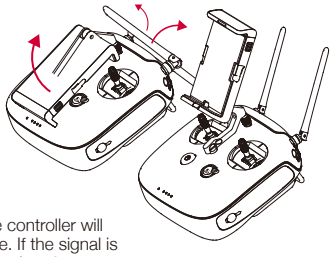

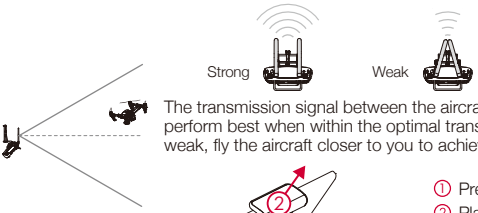

The transmission signal between the aircraft and remote controller will perform best when within the optimal transmission range. If the signal is weak, fly the aircraft closer to you to achieve optimal signal performance.

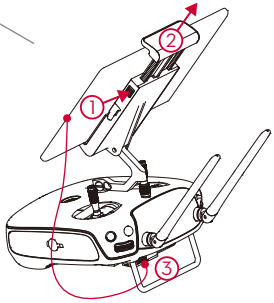

① Press the button to release the clamp.
② Place your device onto the clamp and adjust the clamp to hold it securely.
③ Connect your mobile device to the remote controller with a USB cable.

If you have purchased an Inspire 1 Pro with dual remote controllers, the Master remote controller will connect to the aircraft automatically when powered on. Master/Slave mode is disabled by default. Activate it and set it up through the DJI GO app.

Connecting the Master remote controller to the Slave remote controller: On the Master remote controller, launch the DJI GO app and go to the Camera page. Then tap on the top of your screen to enter the remote controller settings window. Tap “Activate Master/Slave Mode”and select “Master”. Then enter your desired connection password for the “Slave” remote controller. On the Slave remote controller, select “Slave “ and tap “Search” to find the Master remote controller. Select the “Master” remote controller from the “Master RC List” and input the connection password.

Using DJI Focus
Use DJI Focus to remotely adjust the camera lens (e.g. continuous manual focus). Refer to "Inspire 1 Pro User Manual" or "DJI FOCUS User Manual" for more information.

- Do not use other 2.4GHz devices at the same time to avoid signal interference.

7. Installing the Camera

① Ensure the camear body cap, the lens cap and rear cap are removed. Align the two Lens Mount Indexes on the camera body and camera lens, and insert the camera lens into the body of the camera.
② Rotate the camera lens clockwise until you hear a click.
③ Rotate the Lens Lock anticlockwise to lock it.
④ Mount the Balancing Ring (or a filter) and the Lens Hood. Insert the Micro SD card.

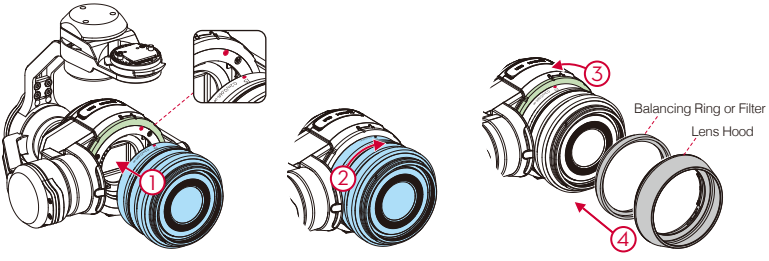

Rotate the Lens Lock anticlockwise to tighten the junction between the lens and camera body when using the camera.
Rotate the Lens Lock clockwise to loosen the junction between the lens and camera body when attaching and detaching the camera.

- Always set the camera lens to AF mode.
- While holding down the Lens Release Button, rotate the camera lens anticlockwise to detach it.
- Mount only a lens filter or Balancing Ring on the camera.

8. Mounting the Gimbal and Camera

Ensure to power off the aircraft.

① Rotate the Gimbal Lock to the unlocked position.
② Align the key on the damping plate with the slot on the gimbal's pan motor.
③ While aligning the white lines on the Gimbal Connector and Gimbal Lock, insert the Gimbal Connector.
④ Rotate the Gimbal Lock to the locked position.

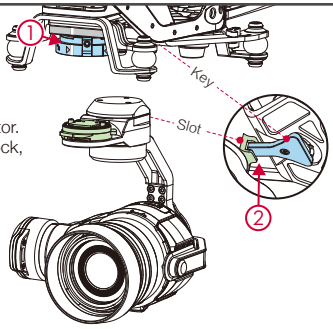

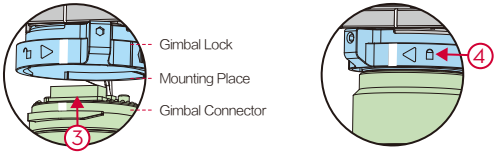

9. Preparing for Flight

Place the aircraft on a flat surface, in an open space, with the back facing you.

① Move the Flight Mode Switch to the right to select P mode. (P mode is Positioning mode, A mode is ATTI mode, and the F mode is Function mode.)
② Power on the remote controller.
③ Power on the aircraft and wait for the self-check to complete. Do not move the aircraft during the self-check.
④ Ensure the remote controller is linked to the aircraft before flight. Re-link the remote controller to the aircraft if it fails to connect. Refer to the INSPIRE 1 PRO User Manual on how to link.
⑤ Ensure the remote controller and your mobile device are connected with a USB cable. Launch the DJI GO app when connecting to the aircraft for the first time, and follow the instructions within the app.
⑥ Launch the DJI GO app and tap "Camera". Ensure the aircraft is functioning normally by completing the Checklist.Beginner Mode is enabled by default when you launch the DJI GO app for the first time. The aircraft's altitude and flight distance is restricted when flying in Beginner Mode. We recommend you fly in Beginner Mode when using the aircraft for the first time. You may disable Beginner Mode in the settings page of the DJI GO app.
⑦ Calibrate the compass by tapping the Aircraft Status Bar in the app and selecting "Calibrate". Then follow the on-screen instructions.
⑧ Installing the 1345T Propellers: Attach the propellers with white arrows onto the motors with white arrows, and attach the propellers with red arrows onto the motors with red arrows. To attach the propeller, rotate the propeller lock to align the arrows on the mounting plate and propeller lock. Attach the propeller and then rotate the propeller lock until the arrows on the propeller and propeller lock are aligned.

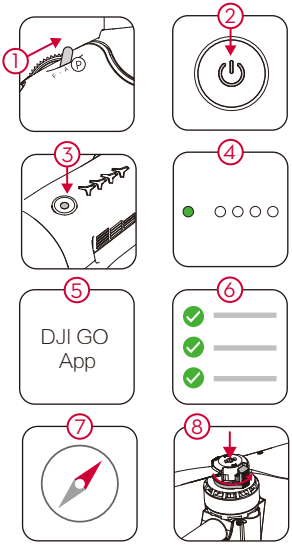

- When not in P mode, the Inspire 1 Pro will only maintain altitude, not position, and will drift with wind or user inputs. Return to Home is not available in F mode.
- Ensure the aircraft is fully charged when use with the Zenmuse X5, as power suddenly drops may bring dangerous.

10. Remote Controller Operation

The remote controller is by default set to Mode 2 (throttle controlled by the left-hand stick).
Adjust the tilt angle of camera by using the Gimbal Dial.

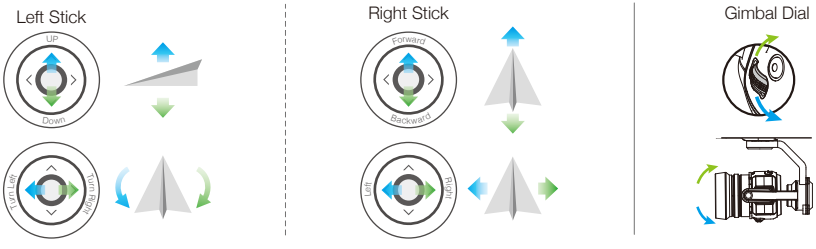

- You can set the remote controller to different modes using the DJI GO app.

11. Flight

Safe to Fly (GPS)

Before taking off, make sure the aircraft status bar in the DJI GO app shows “Safe to Fly (GPS)”. Otherwise, the aircraft cannot hover in place and record the Home Point.

● Auto Taking - Off & Landing:

(In the Camera screen of the DJI GO app)

Tap and confirm your selection. The aircraft will automatically take off, retract its landing gear, and hover at 1.2 meters after you tap and confirm Auto Take-off.

Tap and confirm your selection. The landing gear will lower and the aircraft will automatically land.

● Manual Take - off & Landing:

Start the motors by pulling both control sticks to the bottom inside (or outside) corners. Release the sticks once the motors start. Slowly push the left (throttle) stick up to take off. Once in the air, toggle the Transformation Switch up to raise the landing gear.

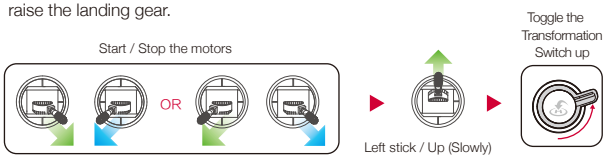

Gently pull the left (throttle) stick down to lower the aircraft until it touches the ground. Pull both sticks to the bottom inside corners to stop the motors.
After flight, change the aircraft back into Travel Mode. Do not attempt this at the beach, over grass, or over monochromatic carpet. Then place the aircraft on a flat surface and remove the gimbal and camera for transport.

Left stick / Down (Slowly)

- It is highly recommended that you only take off when the Aircraft Status bar is green.
- The aircraft cannot take off if the Critical Low Battery Warning is active.
- The Intelligent Flight Battery must warm-up if the outside temperature is low. A warning will display in the DJI GO app.
- Rotating propellers can be dangerous. Do not start the motors when there are people nearby and always fly in a wide open area.
- Never stop the motors during flight. Always keep your hands on the remote controller so long as the motor is still spinning. Power off the aircraft before turning off the remote controller after landing.

● Return to Home

RTH Button

The App’s RTH Button

1. Press and hold the return home button until the LED surrounding the button is blinking white, and the return home procedure is in process. Press once to stop the procedure.
2. The DJI GO app notifies users to take action when the battery level falls to a specified threshold. This warning threshold can be set within the DJI GO app. The aircraft will land immediately when it reaches Critical Low Battery Level Warning.
3. Failsafe: The Inspire 1 Pro will enter RTH mode if remote controller signal is lost.

- While returning home, its altitude can be adjusted by the user to avoid obstructions.

Appendix

Aircraft Status Indicator Description

- Slowly: Safe to fly,GPS working
- X2 Double: Vision Positioning System working, no GPS
- Slowly: P-ATTI or ATTI
- Quickly: Not connected to remote controller
- Slowly: Low battery level warning
- Quickly: Critical low battery level warning
- Solid: Critical error
- / Blinking Alternately: Compass calibration required

Remote Controller Status LED

- RC normal but not connected to aircraft.
- RC normal and connected to aircraft.
- RC Slave Mode and not connected to aircraft.
- RC Slave Mode and connected to aircraft.
- B-B-B... Aircraft low battery warning / RC error.
- B—B—... RC idle for 5 minutes.
- / Video downlink error.
- Initiate RTH procedure.
- B... Send RTH command to aircraft.
- BB .. .. Aircraft returning to Home Point.

Using the Camera

- Adjust the camera parameters using the Camera Settings Dial on the remote controller or through the DJI GO app. Press the Shutter Button/Video Record Button to capture photos or record videos.
- Adjust the tilt of the gimbal using the Gimbal Dial.
- Download photos and video from the SD card to your mobile device through the DJI GO app. You may also use a SD card reader to export files to your PC.

Learn more information from:

www.dji.com/product/inspire-1-pro-and-raw

INSPIRE 1 PRO

Creativity Unleashed

www.dji.com